FANTIC MOTOR

CATALOGO PARTI DI RICAMBIO (Telaio)
-CATALOGUE PIECES DETACHEES (Cadre)
-SPARE PARTS CATALOG (Frame)
-ERSATZTEILE KATALOG (Rahmen)

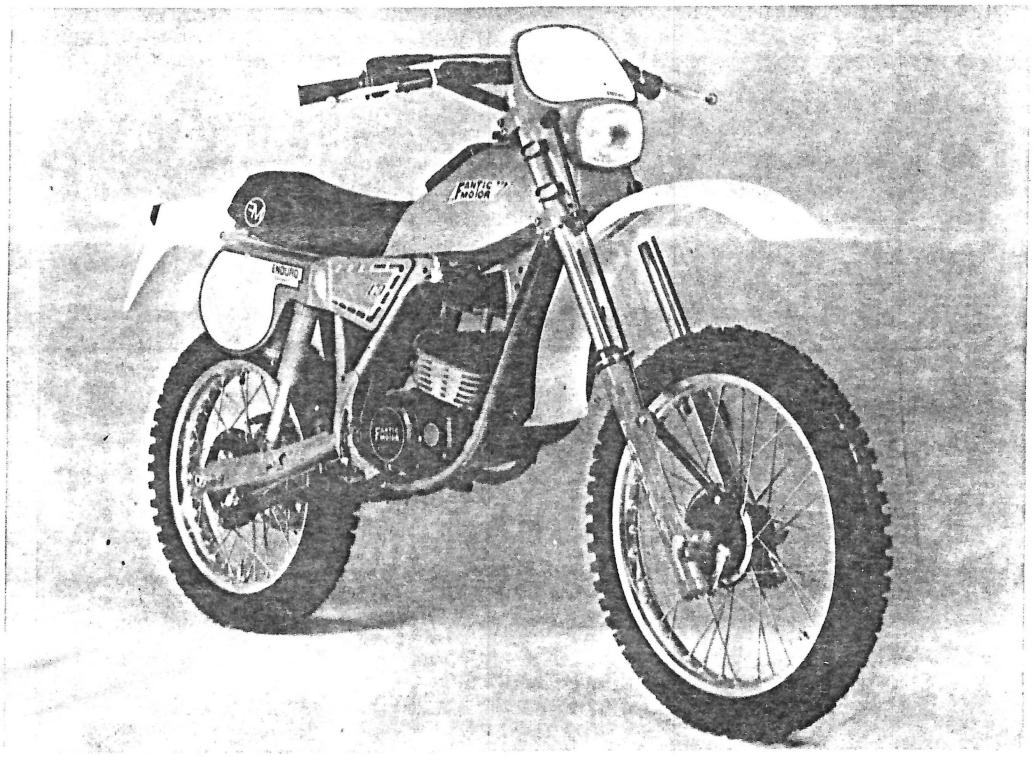

ENDURO 80cc. COMPETITION

CROSS 80cc. COMPETITION

2-1982	ENDURO 80cc. Competition CROSS 80cc. Competition

1/1			PANTIC MOTOR

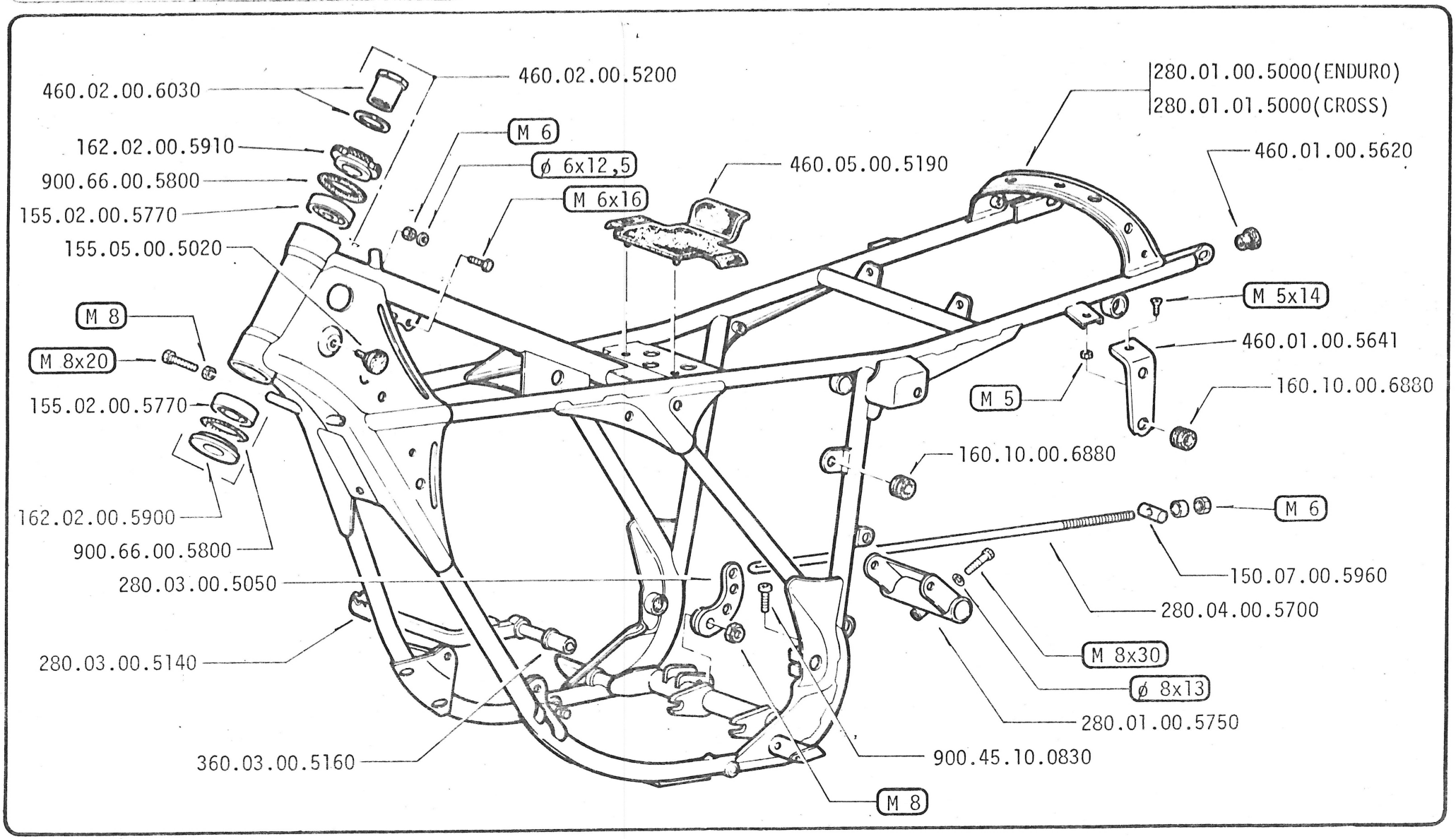

2-1982	ENDURO 80cc. Competition CROSS 80cc. Competition

2/1			

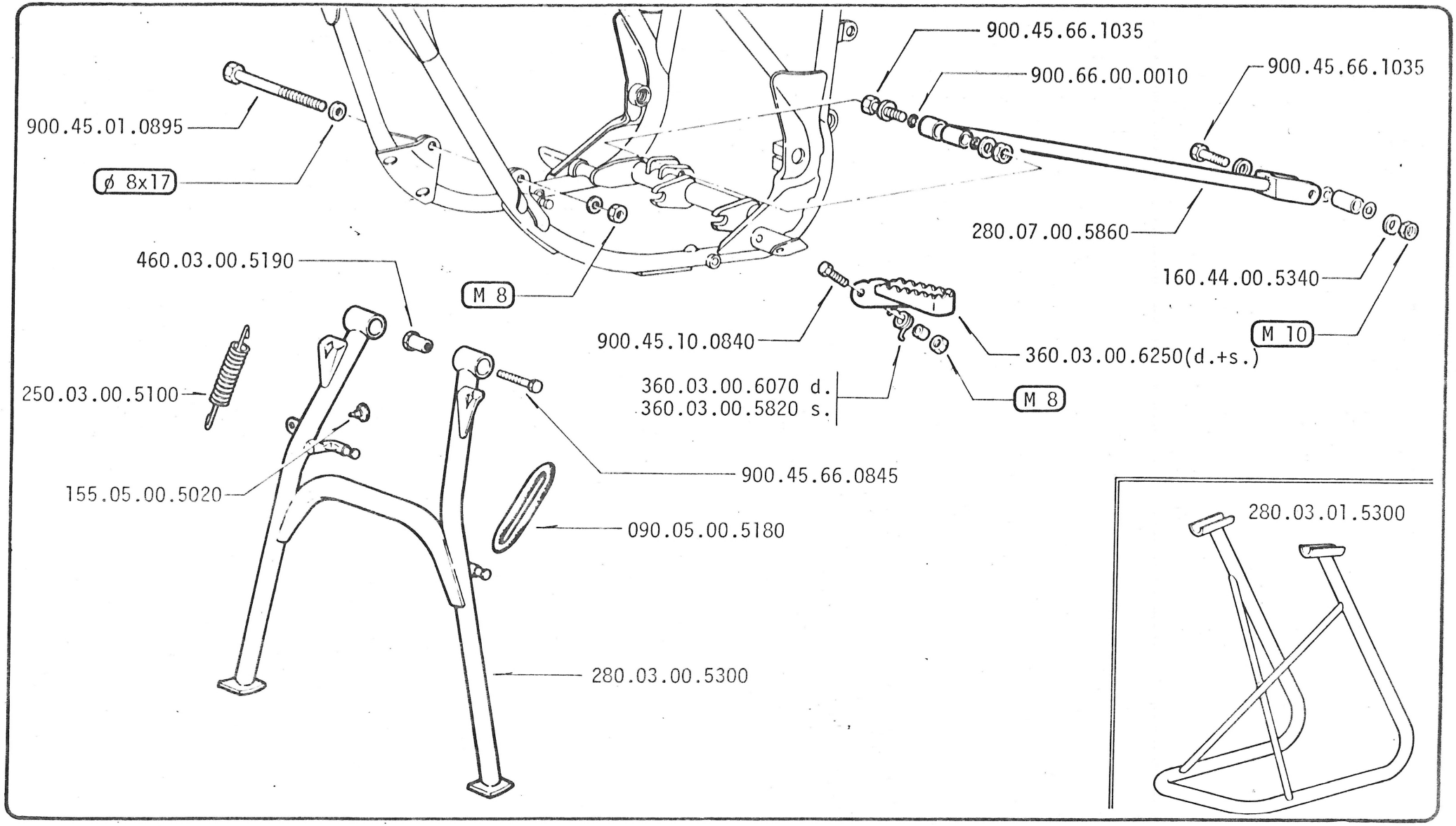

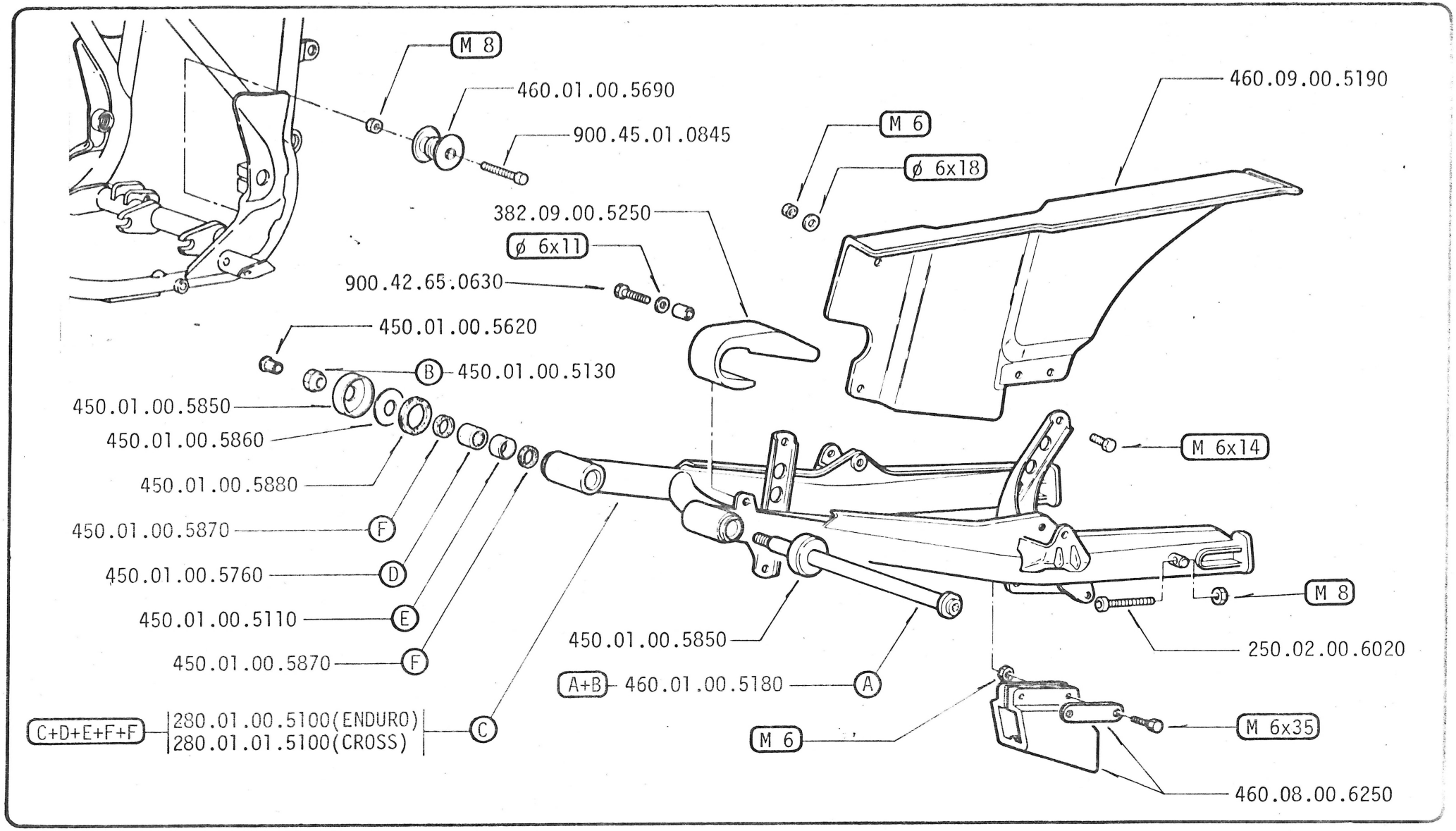
M 8
460.01.00.5690
900.45.01.0845
460.09.00.5190
M 6
ø 6x18
382.09.00.5250
ø 6x11
900.42.65.0630
450.01.00.5620
B
450.01.00.5130
450.01.00.5850
450.01.00.5860
450.01.00.5880
450.01.00.5870
F
450.01.00.5760
D
450.01.00.5110
E
450.01.00.5870
F
M 6x14
M 8
450.01.00.5850
250.02.00.6020
A+B
460.01.00.5180
A
C+D+E+F+F
280.01.00.5100(ENDURO)
280.01.01.5100(CROSS)
C
M 6
M 6x35
460.08.00.6250

2-1982	ENDURO 80cc. Competition CROSS 80cc. Competition

4/1			FANTIC MOTOR

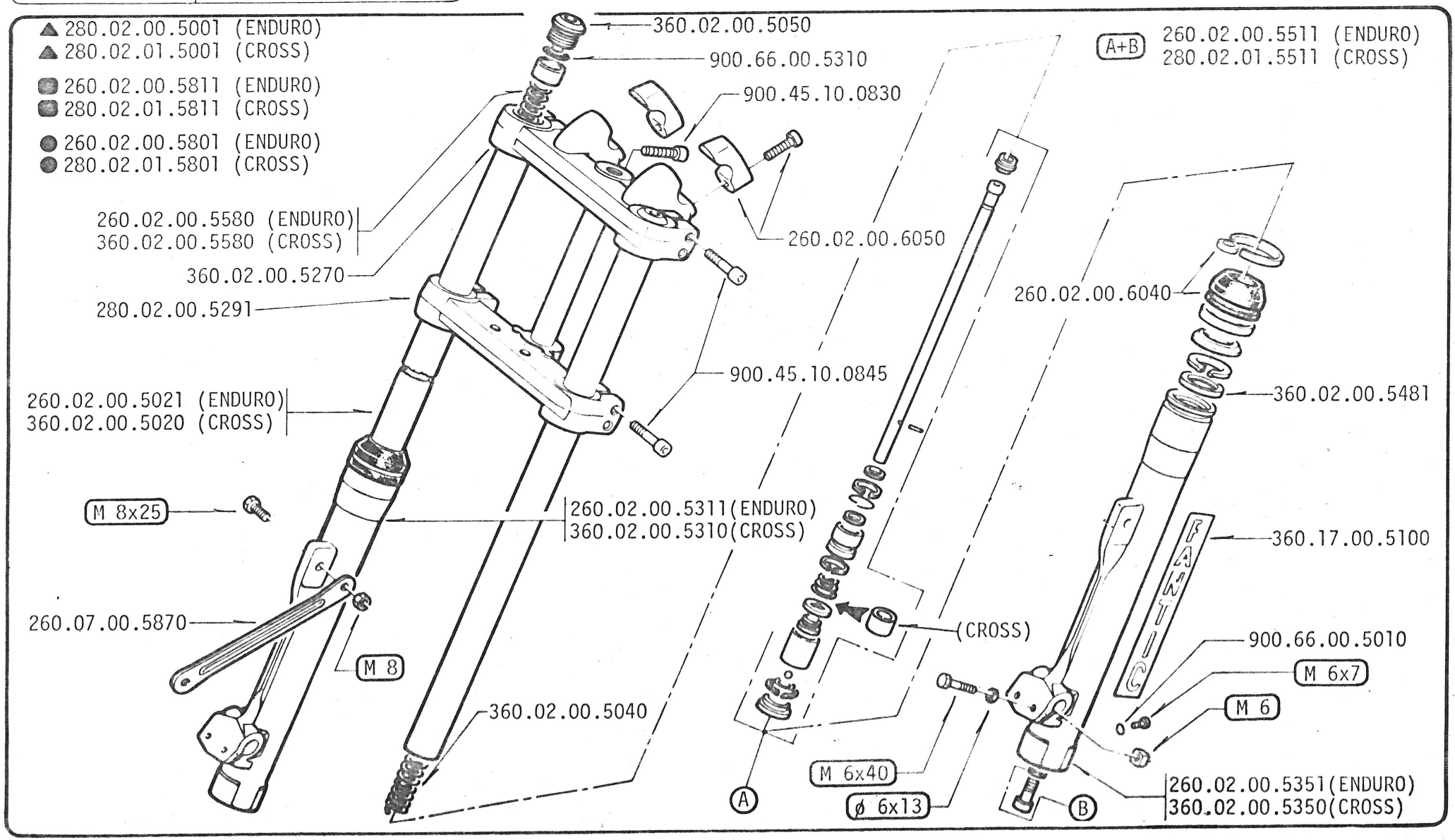

▲ Forcella anteriore completa
■ Gamba destra forcella completa
● Gamba sinistra forcella completa

▲ Fourche avant complète
■ Jambe droite complète
● Jambe gauche complète

▲ Fork complet
■ Fork leg complete R/H
● Fork leg complete L/H

▲ Vordere Ratgabel Komplett
■ Rechtes Gabelbein Komplett
● Linkes Gabelbein Komplett

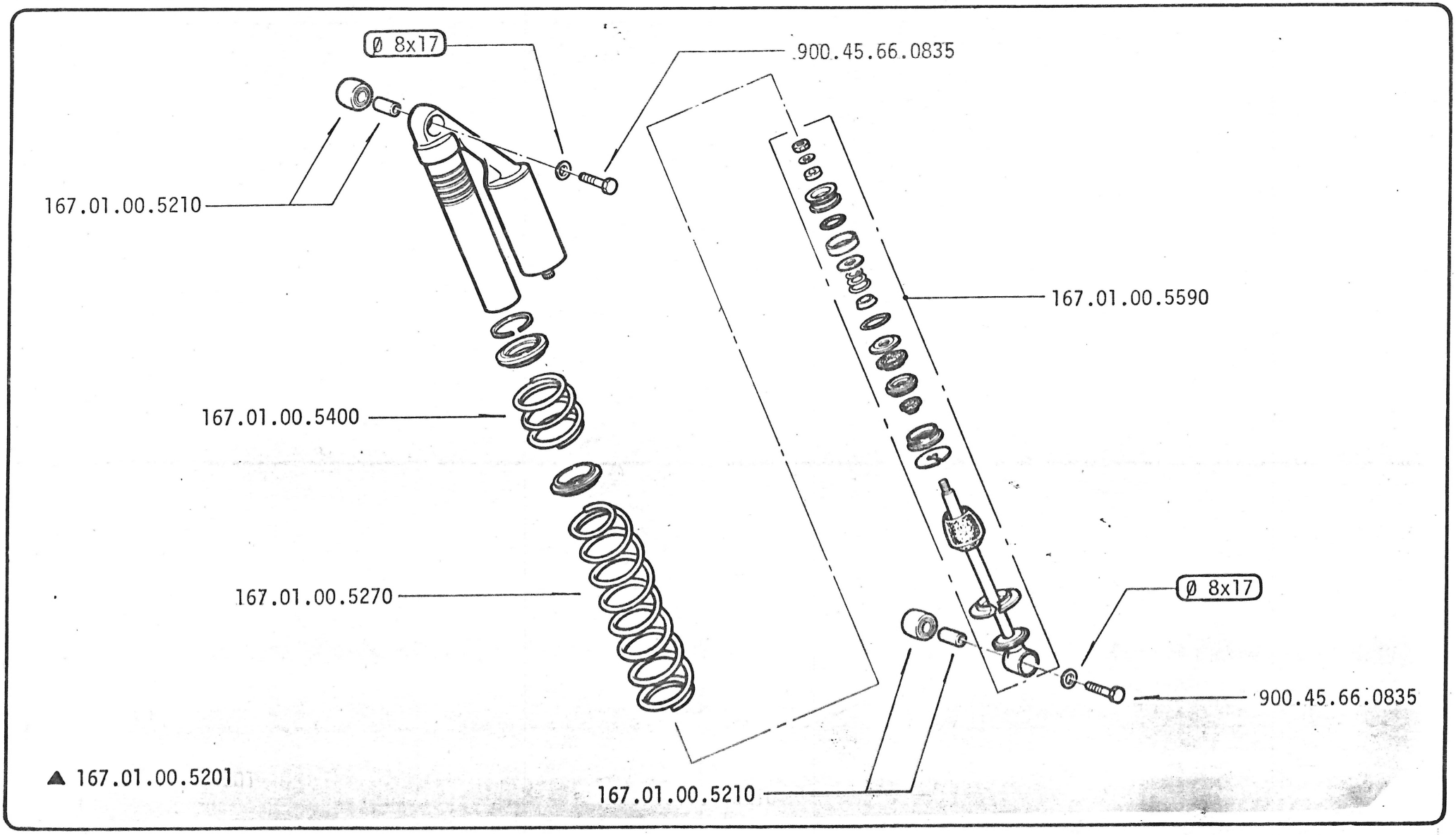

▲ Ammortizzatore completo ▲ Amortisseur complet ▲ Rear shock absorber complet ▲ Hinterer Stossdämpfer Komplett

2-1982	ENDURO 80cc. Competition CROSS 80cc. Competition

6/1			FANTIC MOTOR

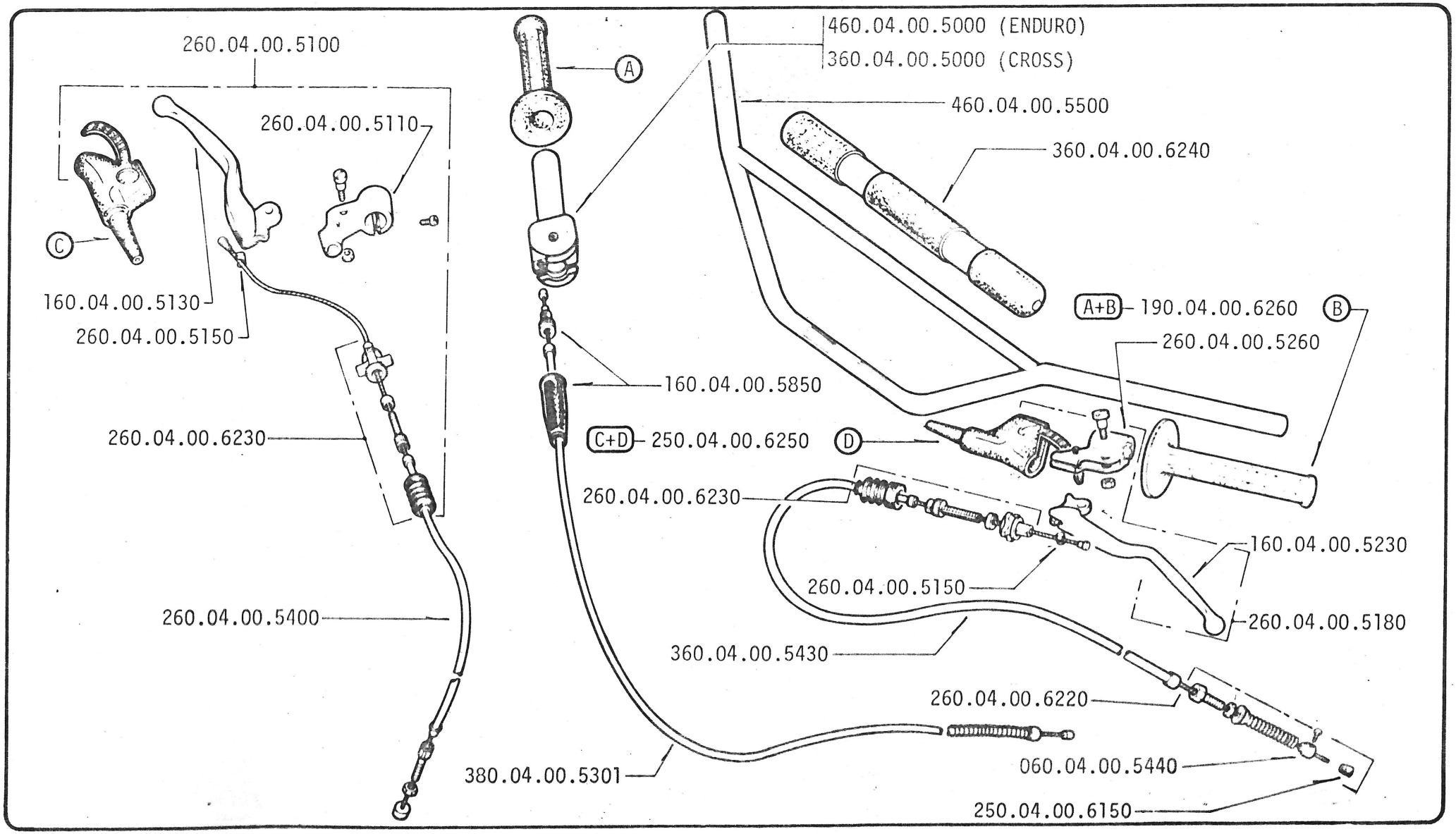

2-1982	ENDURO 80cc. Competition CROSS 80cc. Competition

7/1			FANTIC MOTOR

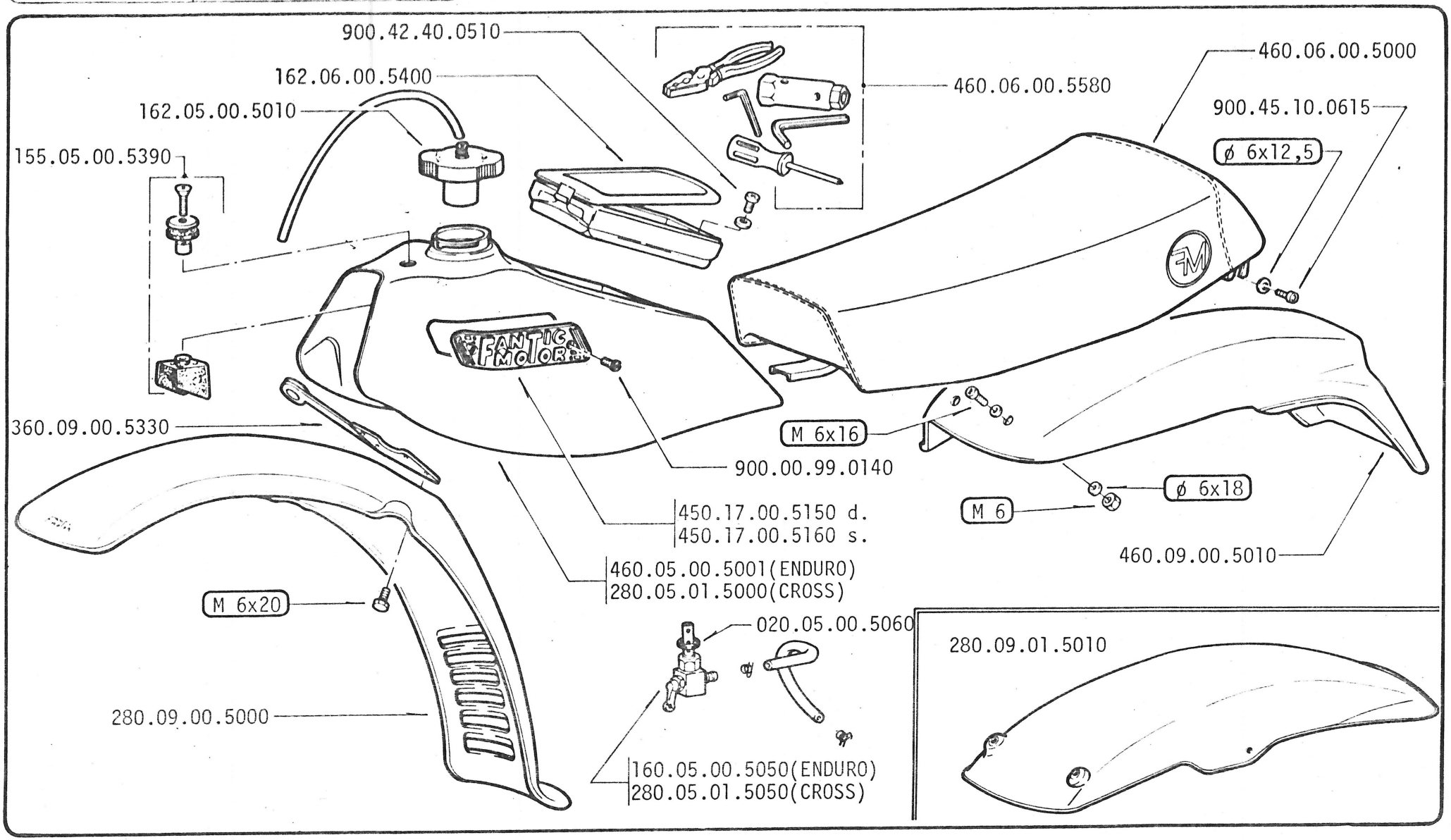

2-1982	ENDURO 80cc. Competition CROSS 80cc. Competition

8/1			FANTIC MOTOR

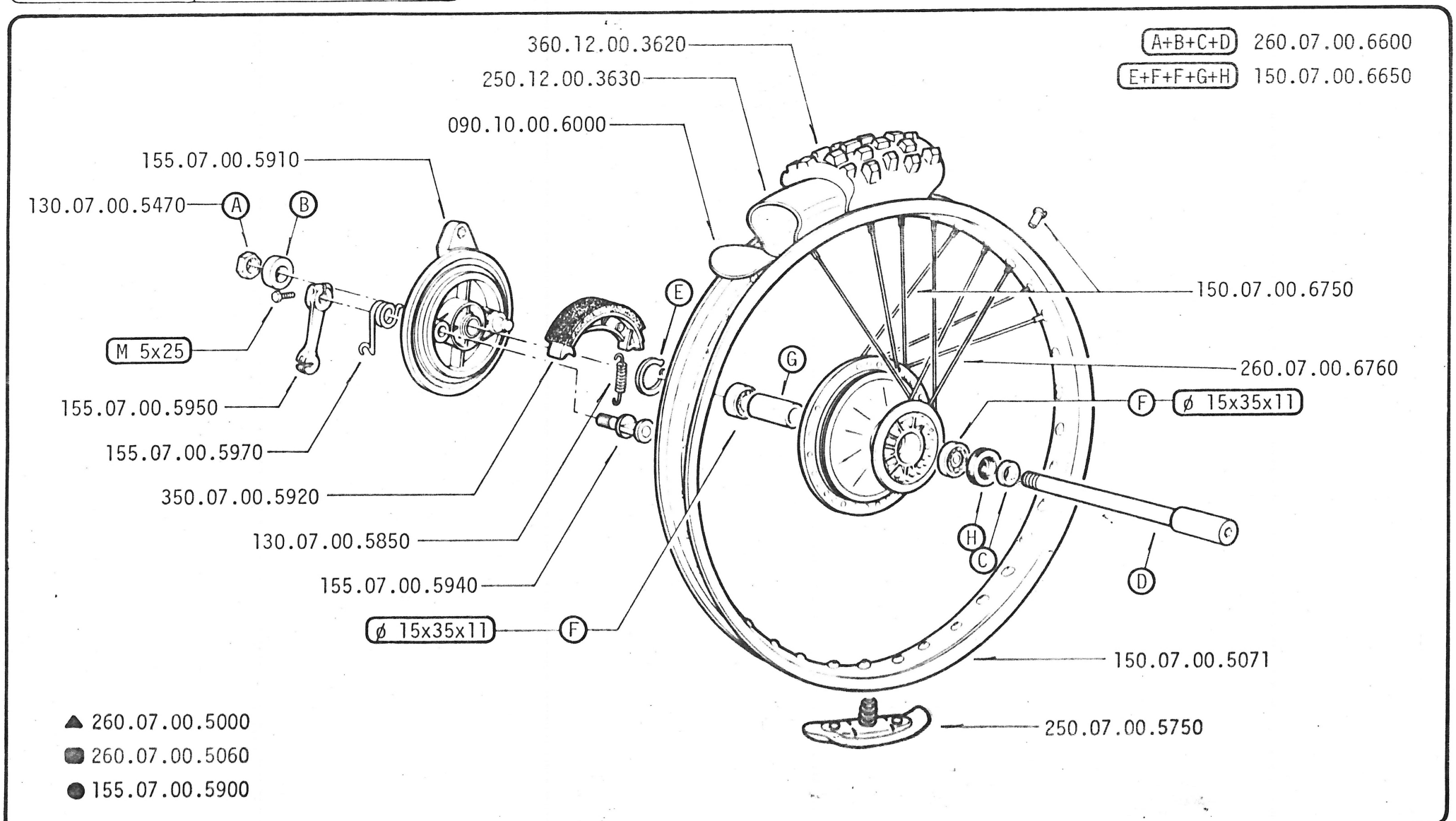

▲ Ruota anteriore completa
■ Mozzo anteriore completo
● Disco portaceppi completo

▲ Roue avant complete
■ Moyeu avant complet
● Disque porte-machoires complet

▲ Front wheel complete
■ Front hub complete
● Front brake plate complete

▲ Vorderrad Komplett
■ Vorderradnabe Komplett
● Bremsplatte Komplett

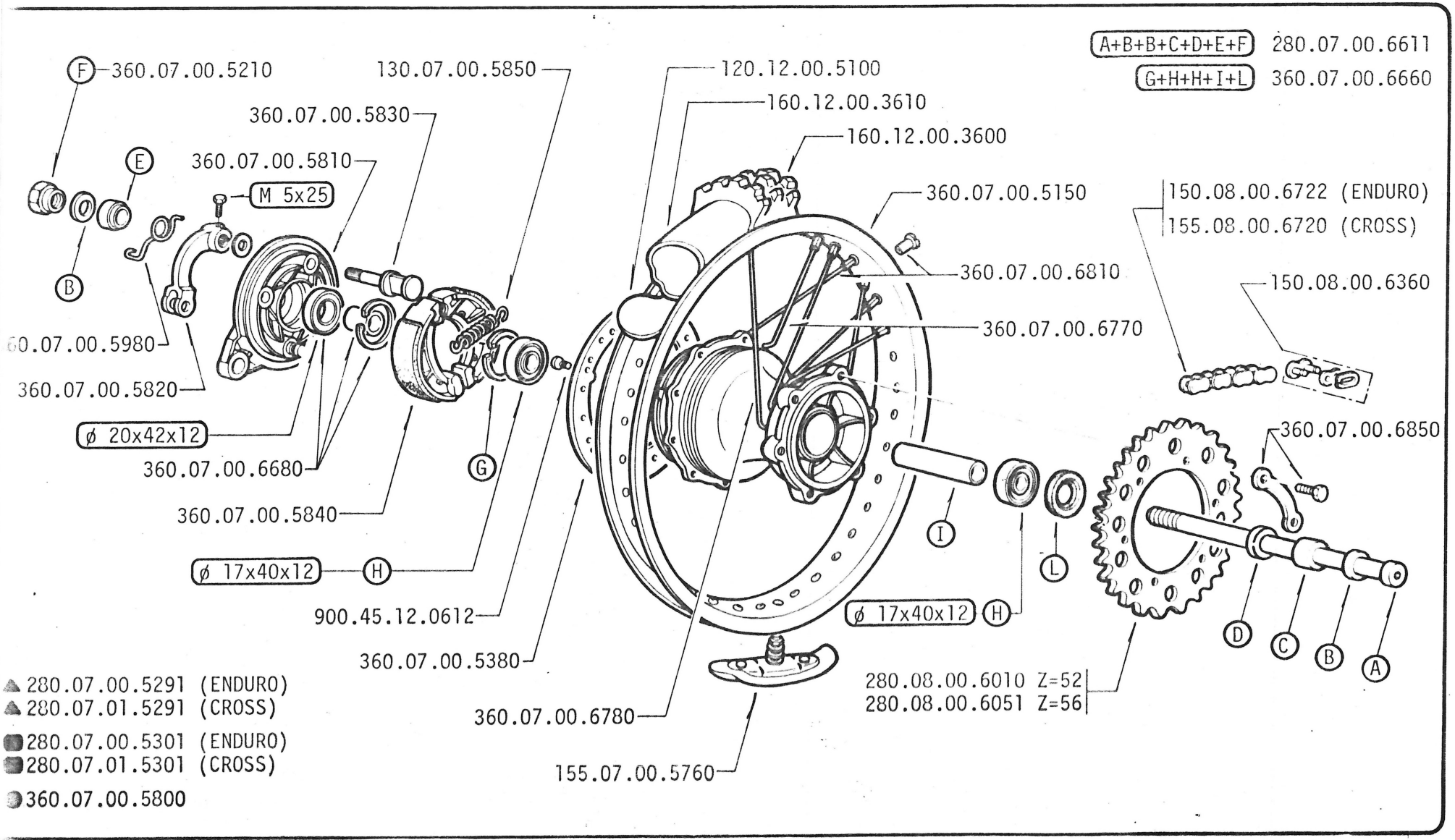

▲ Ruota posteriore completa	▲ Roue arrière complète	▲ Rear wheel complete	▲ Hinterrad Komplett
■ Mozzo posteriore completo	■ Moyeu arrier complet	■ Rear hub complete	■ Hinterradnabe Komplett
● Disco portaceppi posteriore	● Disque porte-machoires	● Rear brake plate complete	● Hinterradbremsplatte Komplett

2-1982	ENDURO 80cc. Competition

Ruota anteriore per veicoli provvisti di contachilometri
Roue avant pour véhicules avec compteurs kilométriques
Front wheel for vehicles supplied with speedometer
Vorderrad für Motorräder mit Kilometerzähler

FANTIC MOTOR

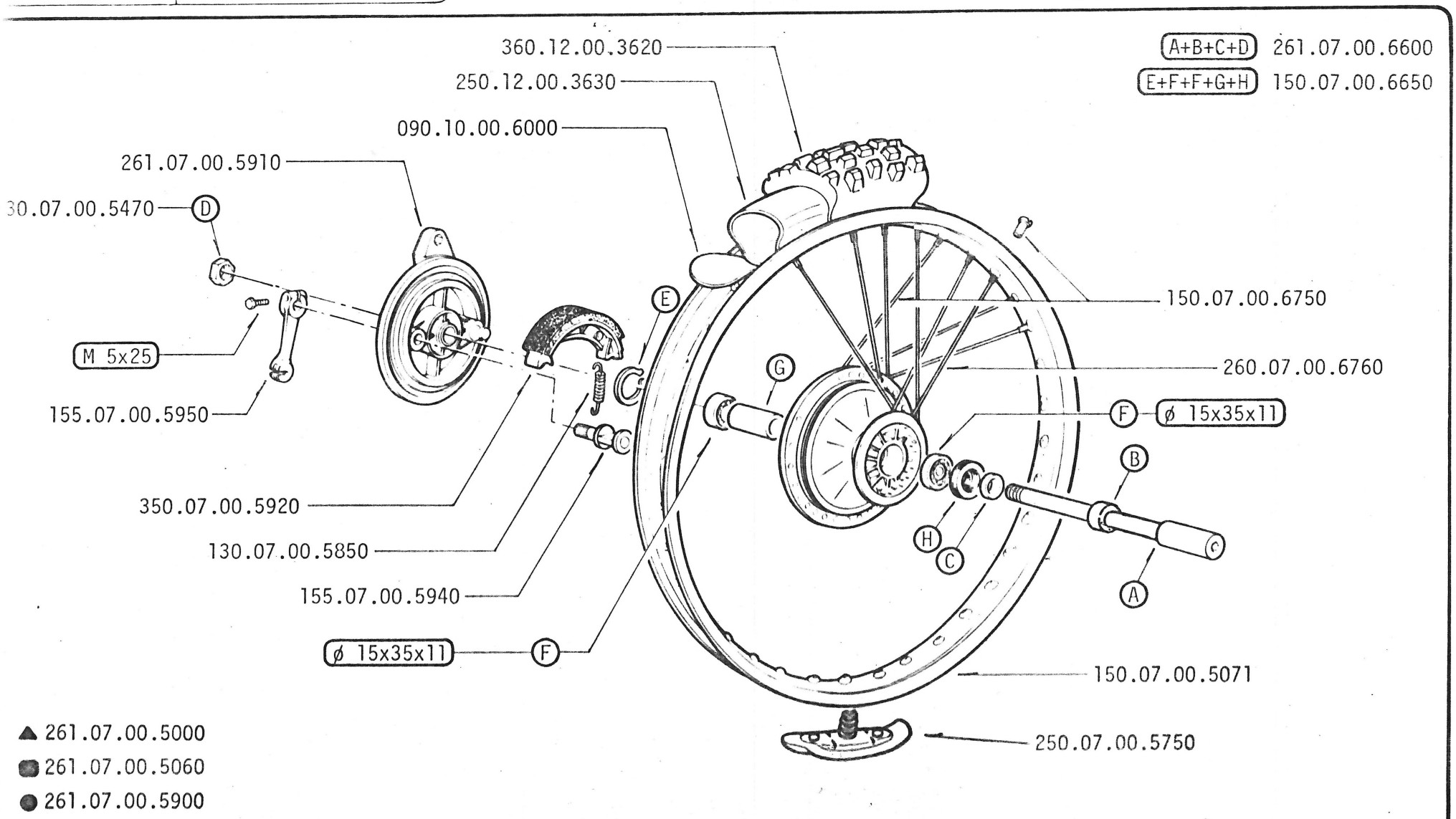

▲ Ruota anteriore completa
■ Mozzo anteriore completo
● Disco portaceppi completo

▲ Roue avant complète
■ Moyeu avant complet
● Disque porte-machoires complet

▲ Front wheel complete
■ Front hub complete
● Front brake plate complete

▲ Vorderrad Komplett
■ Vorderradnabe Komplett
● Bremsplatte Komplett

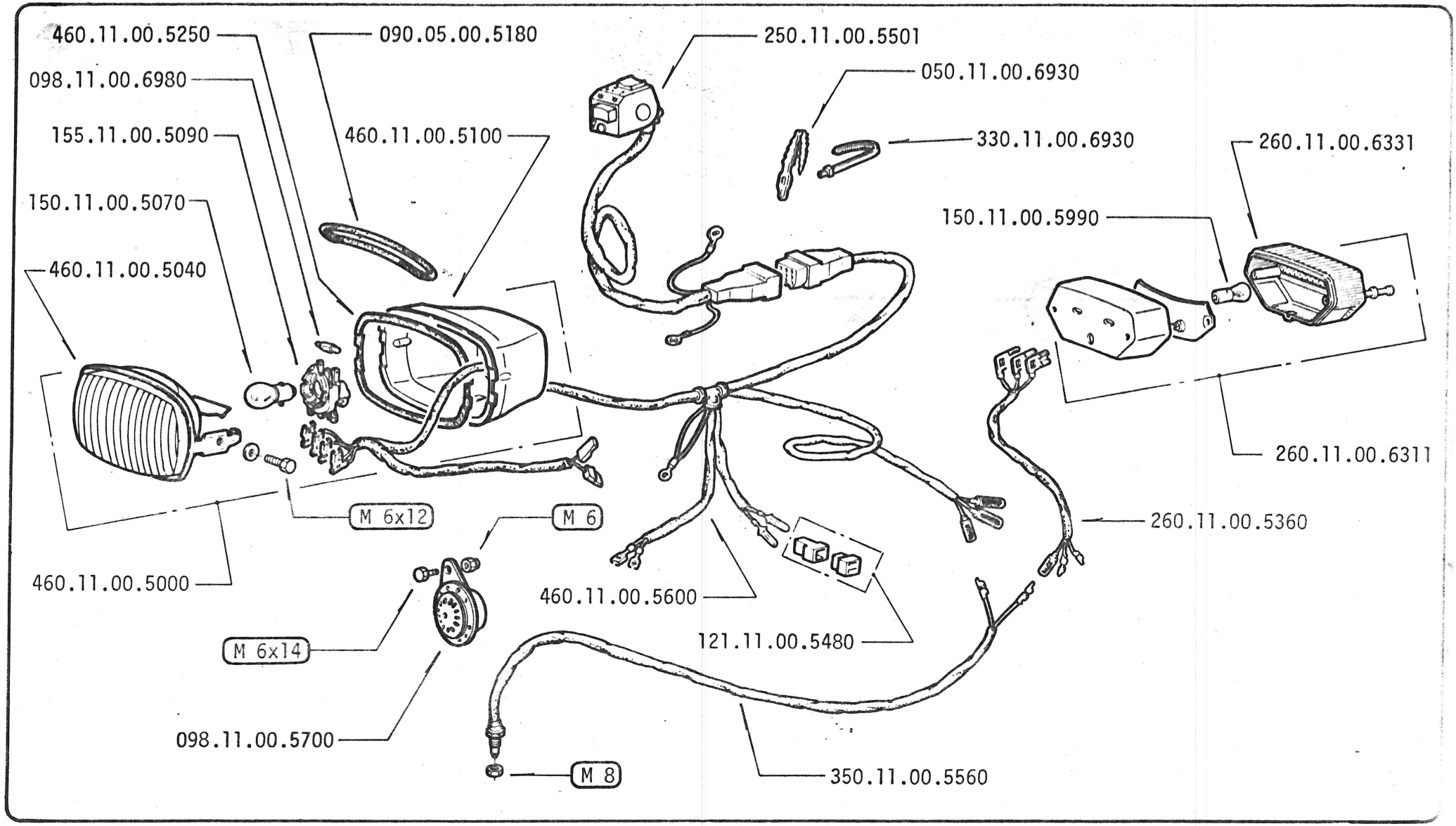
460.11.00.5250
090.05.00.5180
250.11.00.5501
050.11.00.6930
098.11.00.6980
155.11.00.5090
460.11.00.5100
330.11.00.6930
260.11.00.6331
150.11.00.5070
150.11.00.5990
460.11.00.5040
M 6x12
M 6
260.11.00.6311
260.11.00.5360
460.11.00.5000
460.11.00.5600
121.11.00.5480
M 6x14
098.11.00.5700
M 8
350.11.00.5560

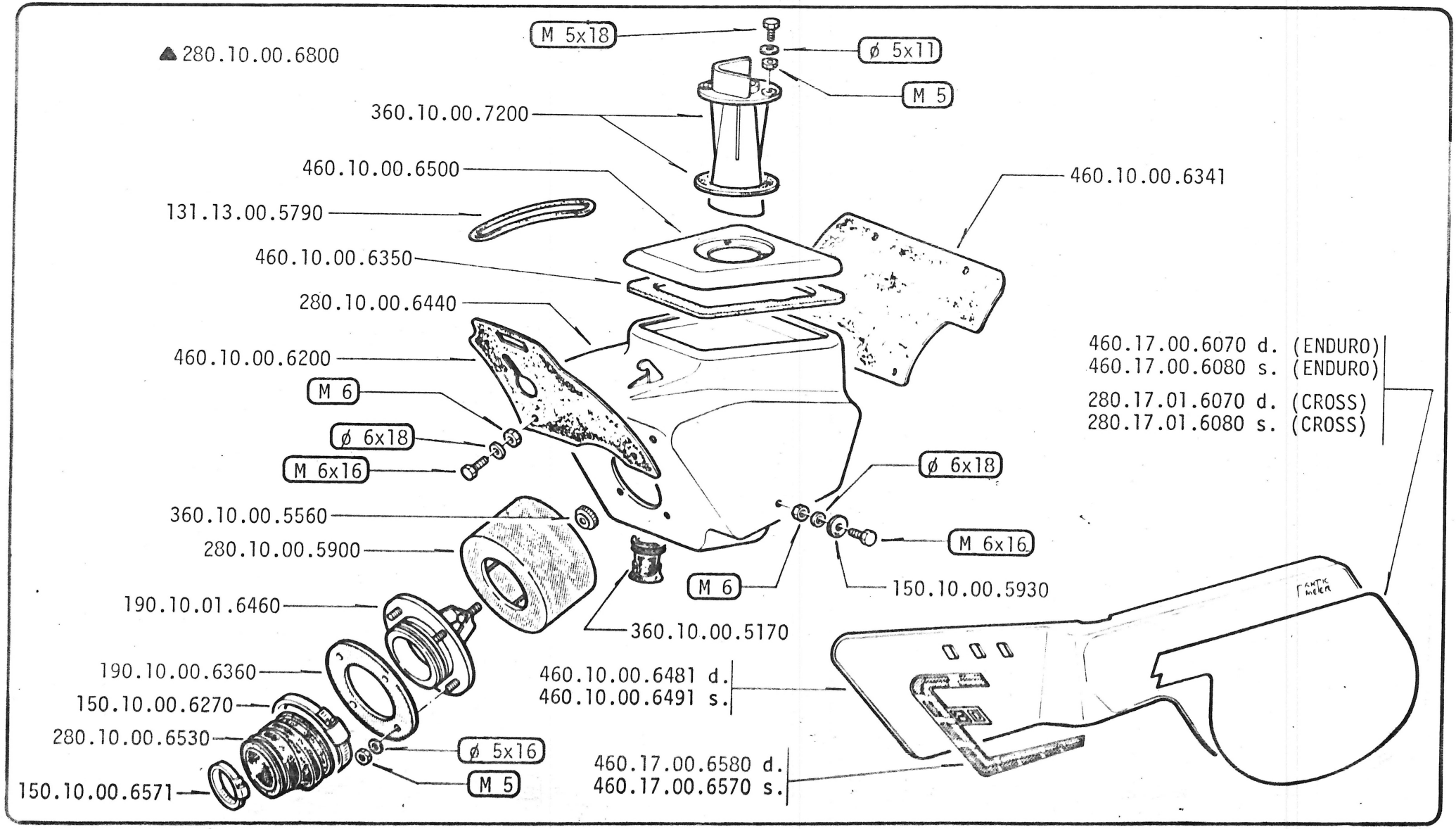

▲ Gruppo di aspirazione completo ▲ Groupe aspiration complet ▲ Group intake assembly ▲ Ansaugbaugruppe Komplett

2-1982	ENDURO 80cc. Competition CROSS 80cc. Competition

13/1			FANTIC MOTOR

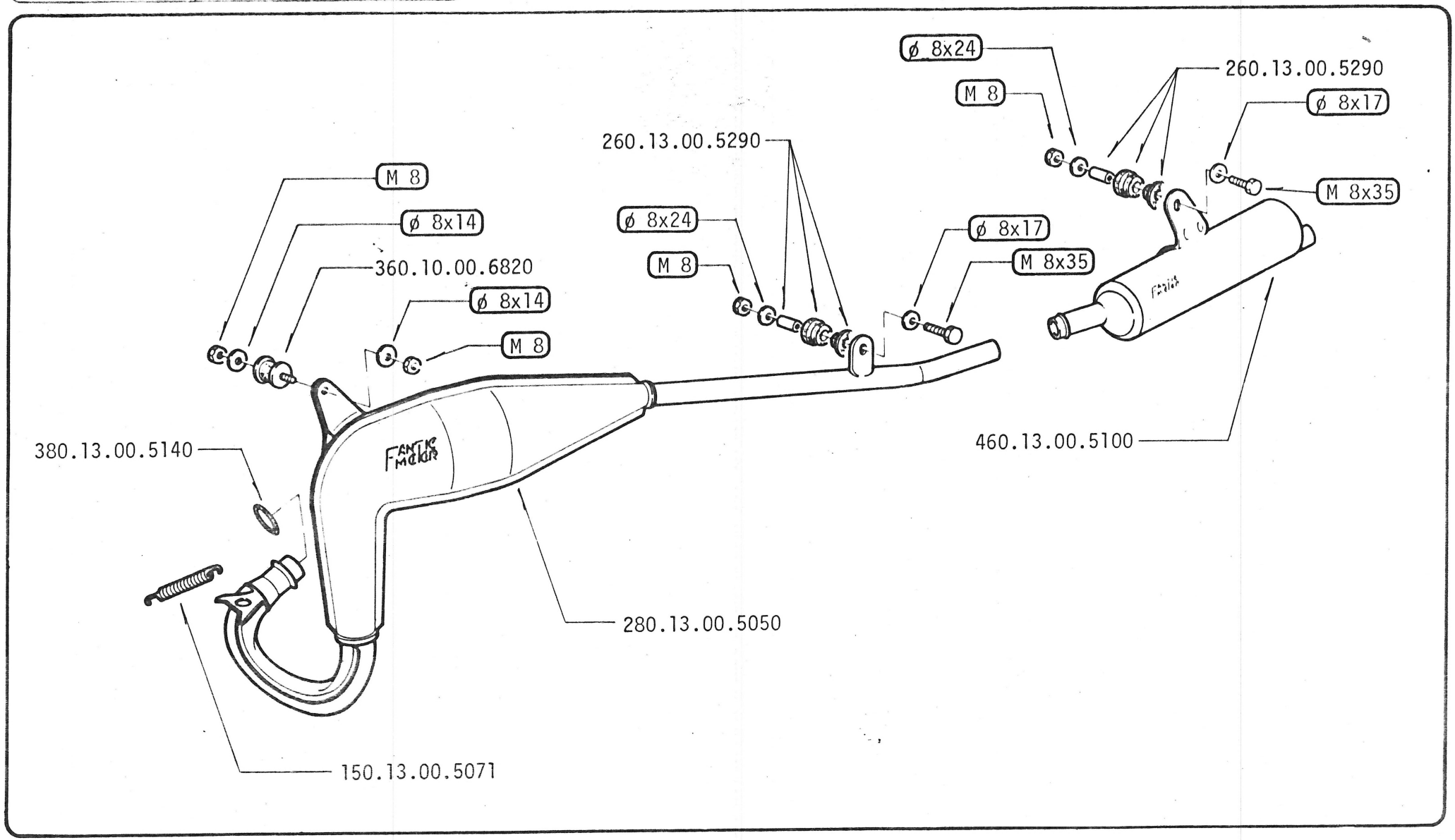

2-1982	ENDURO 80cc. Competition CROSS 80cc. Competition

FANTIC MOTOR

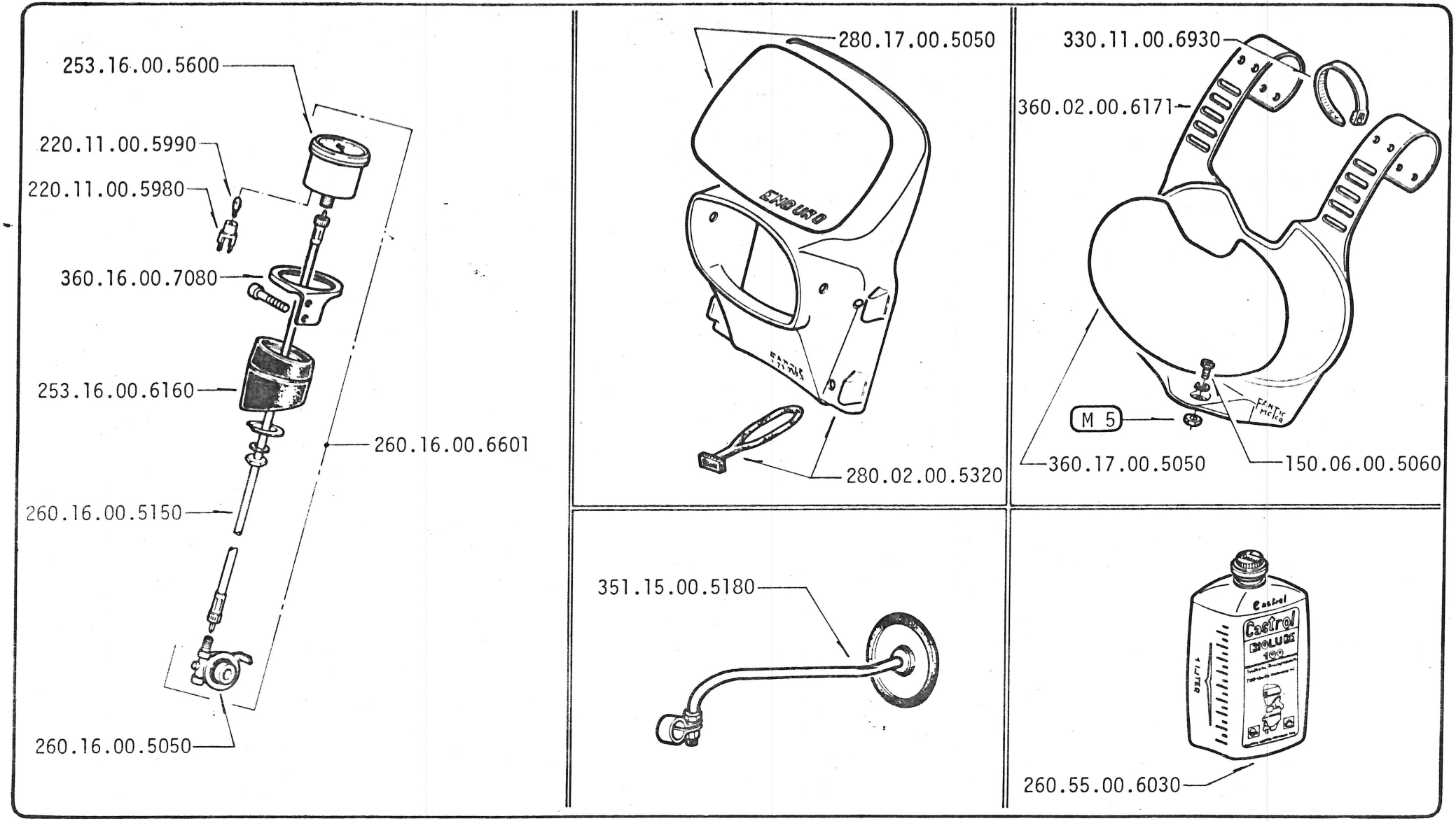

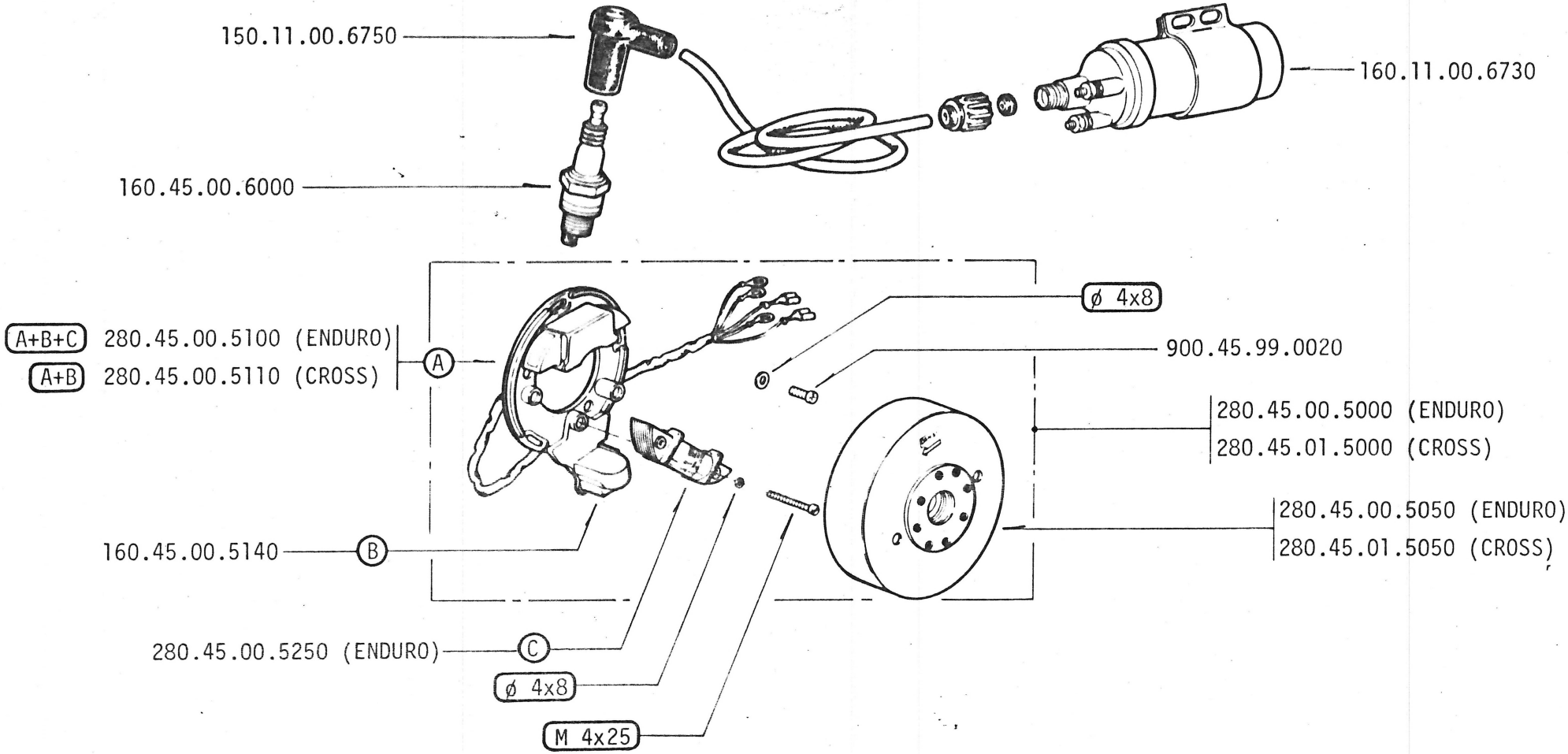
150.11.00.6750
160.11.00.6730
160.45.00.6000
A+B+C 280.45.00.5100 (ENDURO)
A+B 280.45.00.5110 (CROSS)
A
ø 4x8
900.45.99.0020
280.45.00.5000 (ENDURO)
280.45.01.5000 (CROSS)
280.45.00.5050 (ENDURO)
280.45.01.5050 (CROSS)
160.45.00.5140
B
280.45.00.5250 (ENDURO)
C
ø 4x8
M 4x25

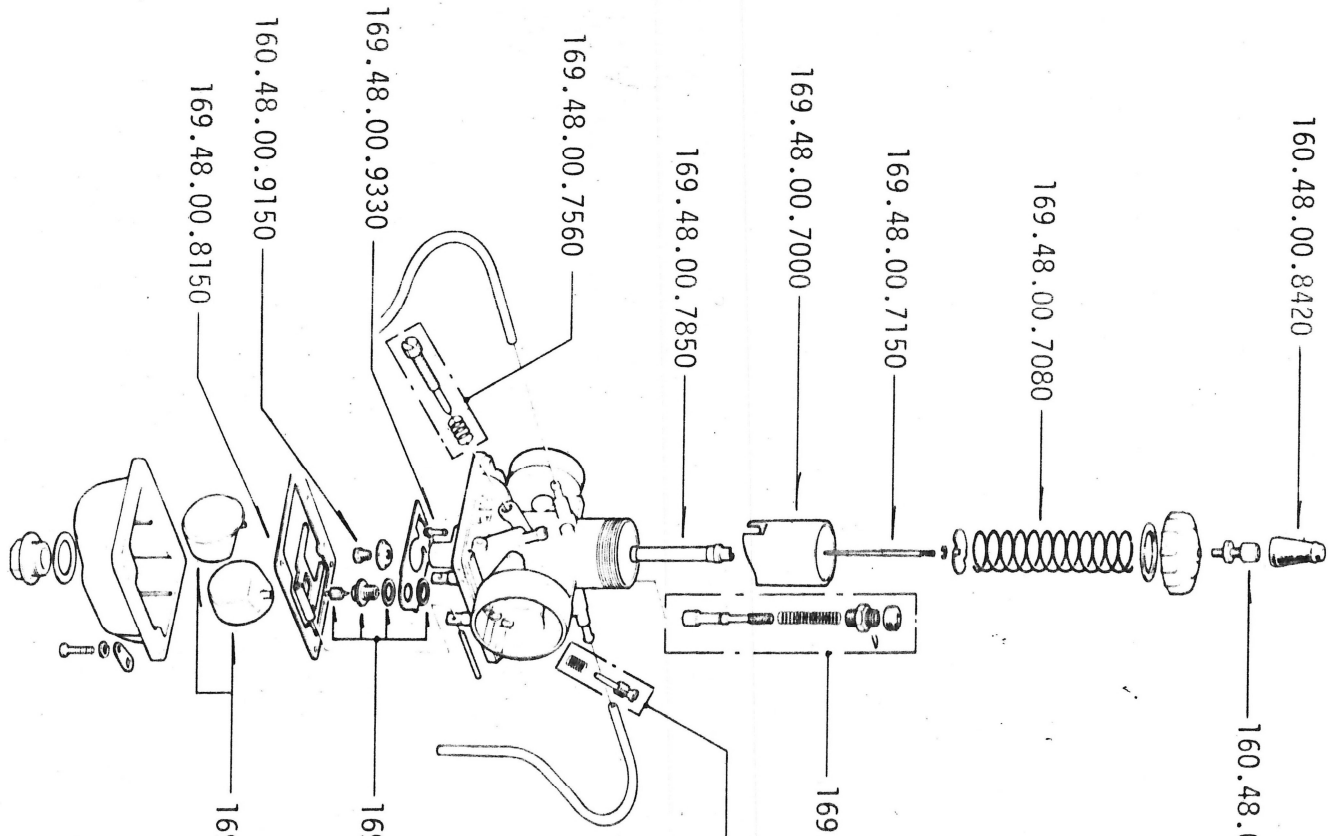

▲ 160.48.00.5000

SG 169.48.00.5040

▲ Carburatore completo ▲ Carburateur complet ▲ Carburettor complet ▲ Vergaser Komplett